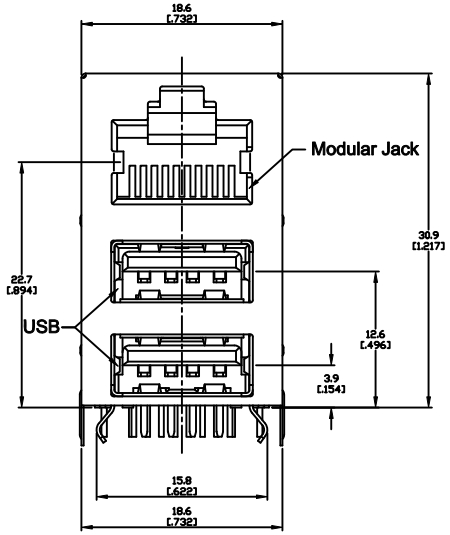

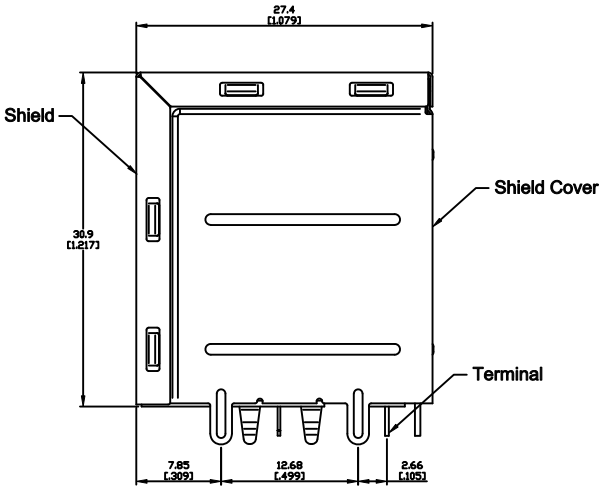

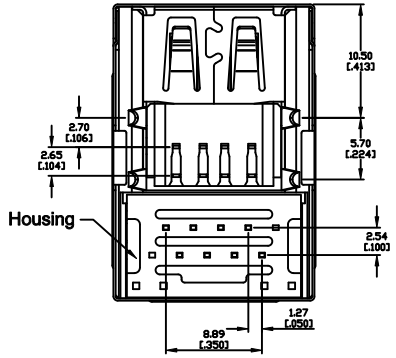

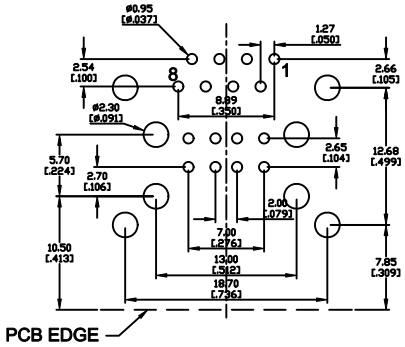

SUGGESTED PCB LAYOUT
TOP VIEW

Electrical Characteristics:
Insulation Resistance : 500MΩ Min.
Contact Resistance : 50mΩ Max.
Withstand Voltage : 1000 VAC 1 minute.
Current Rating : 1.5A

Material:
Housing : Thermoplastic UL94V-0
Contact : Selective Gold Plating
Terminal : 0.35mm Thickness Phosphor Bronze
Plated With Gold And Tin In Solder Area
Shield : See PART NO.
Shield Cover : See PART NO.

PART NO.: SUAJ - 2800 - ＊＊0 - 0 0 -＊＊

Housing Color

Code	M.J	USB
0	Black	Black
1	Black	White
2	Yellow	Black
3	Yellow	Blue

Gold Plated

Code	M.J	USB
0	Gold Flash	1.1
1	6u"	
2	15u"	
3	30u"	
4	50u"	
5	Gold Flash	2.0
6	6u"	
7	15u"	
8	30u"	
9	50u"	

LED Color

LED Color Options		LED DASH OPTION
LED 2 (Left)	LED 1 (Right)	
No LED	No LED	0
Yellow	Green	1
No LED	Green	2
Yellow	No LED	3
Green	Yellow	4
Green	Green	5
Yellow	Yellow	6
Orange/Green	Orange/Green	7
Yellow/Green	Yellow/Green	8
Orange/Green	Yellow	9

Shield Material
Housing Material
B: PBT
P: Nylon
H: PBT Halogen Free
V: Nylon Halogen Free

Shield Material Table

Code	Shield		Shield Cover	
	Material	Plating	Material	Plating
Non	SUS	Non	Brass	Nickel
1	SPCC	Tin	SPCC	Tin
2	SUS	Non	SPCC	Tin

博 歲 電 子 股 份 有 限 公 司
POWERWAY ELECTRONICS CO.,LTD.

ZONE	REV.	DESCRIPTION	DATE	APPD.
Ⓐ				
Ⓑ				
Ⓒ				
Ⓓ				
Ⓔ				

FILE NO : SUAJ-2800 (SERIES)

TOLERANCE (公差) :
0.000 mm ± 0.075 mm
0.00 mm ± 0.15 mm
0.0 mm ± 0.25 mm

TITLE 圖 名	RJ45 / DUAL USB Combo			UNIT 單位	mm inch
PART NO. 料 號	SUAJ-2800-＊＊0-00-＊＊			SCALE 比 例	1 : 1
REV. 版 本	A.0	DATE 日 期	2009-02-03		
CHECKED BY 審 核	Michael		DRAWN BY 製 圖	Michael	