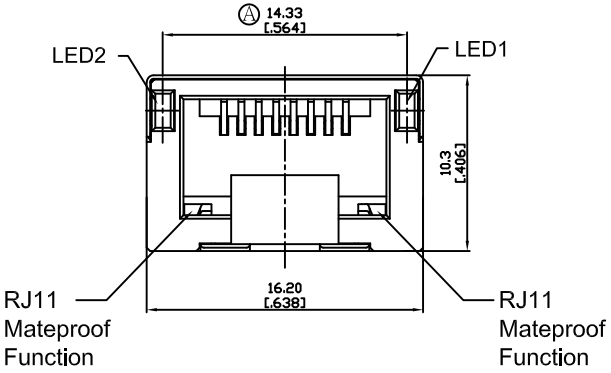

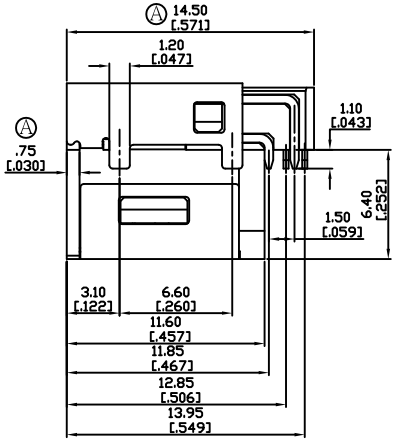

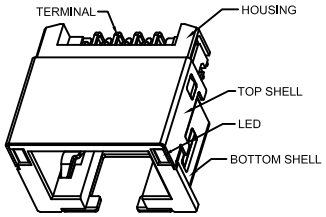

Electrical Characteristics :
- Insulation Resistance : 100MΩMin.
- Contact Resistance : 50mΩ Max.
- Withstand Voltage : 500 VAC 1 minute.
- Current Rating : 1.0A

Material:
- Housing : Thermoplastic UL94V-0
- Contact : Selective Gold Plating
  - Terminal: 0.30mm Thickness Phosphor Bronze Plated With Gold And Tin In Solder Area.
- Top Shield : Brass, Nickel Plating.
- Bottom Shield: SUS

PART NO : 8 1 8 8 K A 1 - B ∗ 1 ∗

- Positions
- Contacts
- Housing Color
  B : Black
- Gold Plated
  0 : Gold Flash
  1 : 6u"
  2 : 15u"
  3 : 30u"
  4 : 50u"
- Ports
- Led Options

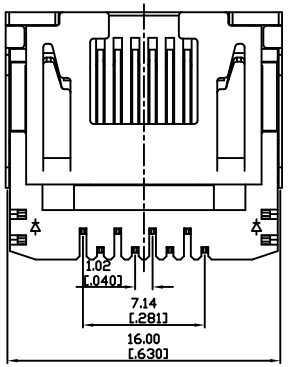

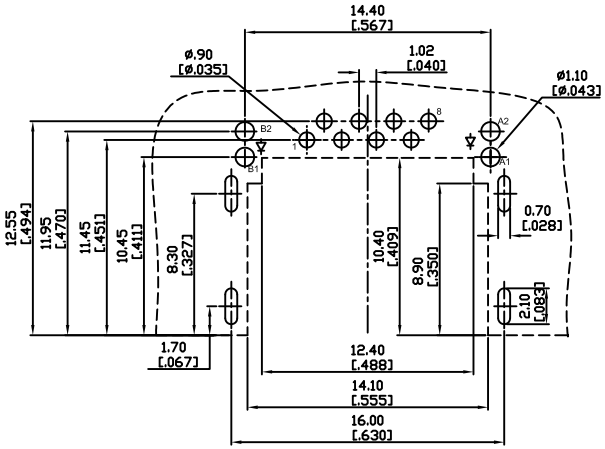

RECOMMENDED PCB LAYOUT
TOP VIEW

RECOMMENDED PCB THICKNESS:1.20± 0.05mm

LED Color Options Table

LED Color Options		LED DASH OPTION
LED 2 (Left)	LED 1 (Right)	
No LED	No LED	0
Yellow	Green	1
No LED	Green	2
Yellow	No LED	3
Green	Yellow	4
Green	Green	5
Yellow	Yellow	6
Orange/Green	Orange/Green	7
Yellow/Green	Yellow/Green	8
Orange/Green	Yellow	9

博 崴 電 子 股 份 限 公 司
POWERWAY ELECTRONICS CO.,LTD.

ZONE	REV.	DESCRIPTION	DATE	APPD.
Ⓐ	A.1	增加尺寸標註	2009.12.28	Eric
Ⓑ				
Ⓒ				
Ⓓ				
Ⓔ				

FILE NO : 81 (SERIES)

TOLERANCE(公差) :
0.000 mm ± 0.075 mm
0.00 mm ± 0.15 mm
0.0 mm ± 0.25 mm

TITLE 圖 名	RJ45, 8P8C, Shielded, With LED, Offset Type, Thru Hole, RJ11 Mateproof Function			UNIT 單位	mm inch
PART NO. 料 號	8188KA1-B∗1∗			SCALE 比 例	1 : 1
REV. 版 本	A.1	DATE 日 期	2009-06-29		
CHECKED BY 審 核	Aaron	DRAWN BY 製 圖	Eric		