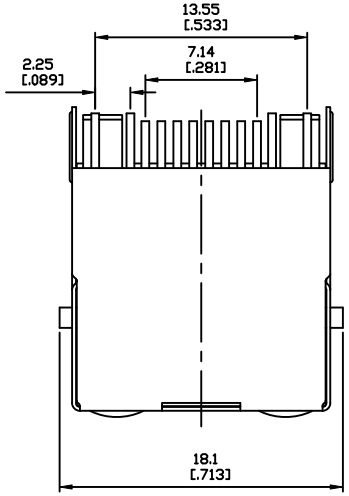

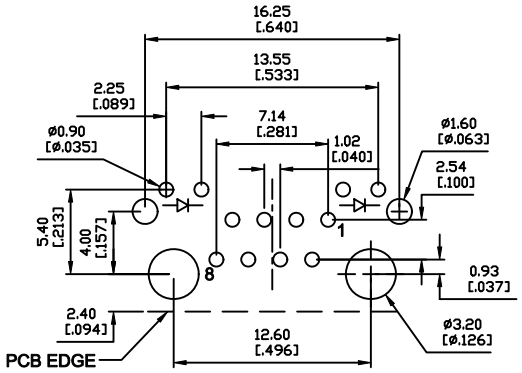

SUGGESTED PCB LAYOUT
TOP VIEW

Electrical Characteristics :
Insulation Resistance : 500MΩ Min.
Contact Resistance : 50mΩ Max.
Withstand Voltage : 1000 VAC 1 minute.
Current Rating : 1.5A

Material:
Housing: Thermoplastic UL 94V-0
Contact : Selective Gold Plating
Terminal: 0.35mm Thickness Phosphor Bronze
Plated With Gold And Tin In Solder Area.
Shielded: Brass ,Nickel Plating
CUL File No : E215573

PART NO : 8 1 8 8 P - B∗1∗

Positions
Contacts
Housing Color
B : Black
Led Options
Ports
Gold Plated
0 : Gold Flash
1 : 6u"
2 : 15u"
3 : 30u"
4 : 50u"

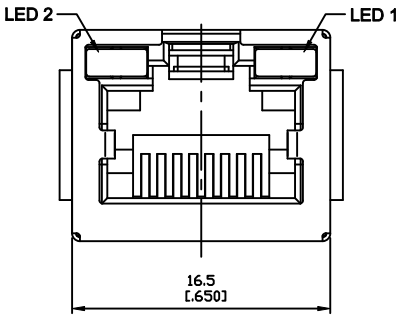

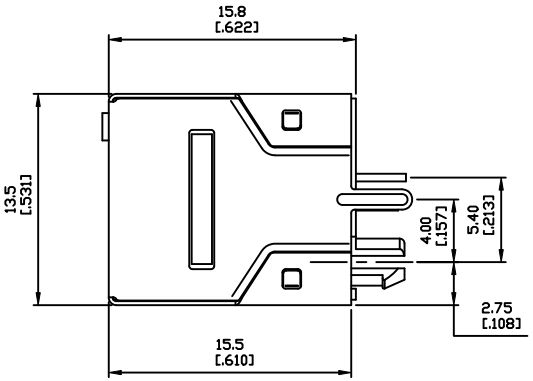

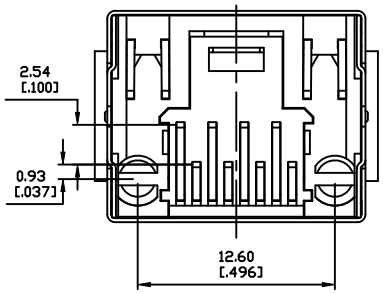

LED Color Options Table

LED Color Options		LED DASH OPTION
LED 2 (Left)	LED 1 (Right)	
No LED	No LED	0
Yellow	Green	1
No LED	Green	2
Yellow	No LED	3
Green	Yellow	4
Green	Green	5
Yellow	Yellow	6
Orange/Green	Orange/Green	7
Yellow/Green	Yellow/Green	8
Orange/Green	Yellow	9
No LED	Green/Yellow	Z
Green	Orange	A
Orange	Green	B
Green	Red	C
Red	Green	D

博歲電子股份有限公司
POWERWAY ELECTRONICS CO.,LTD.

ZONE	REV.	DESCRIPTION	DATE	APPD.
Ⓐ	A.1	Withstand Voltage 500修改為1000VAC	2008-08-01	Nick
Ⓑ				
Ⓒ				
Ⓓ				
Ⓔ				

FILE NO : 81P (SERIES)

TOLERANCE (公差) :
0.000 mm ± 0.075mm
0.00 mm ± 0.15mm
0.0 mm ± 0.25mm

TITLE 圖 名	SHIELDED RJ45 WITH LED PCB JACK			UNIT 單位	mm inch
PART NO. 料 號	8188P-B∗1∗			SCALE 比 例	1 : 1
REV. 版 本	A.1	DATE 日 期	2007-08-13		
CHECKED BY 審 核	Michael		DRAWN BY 製 圖	Maisie	