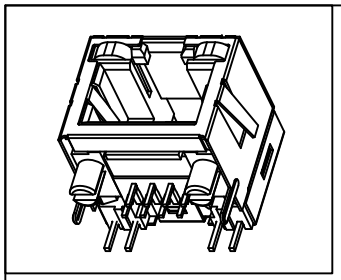

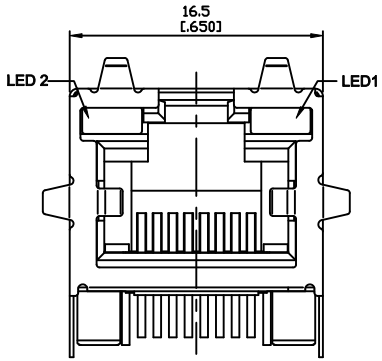

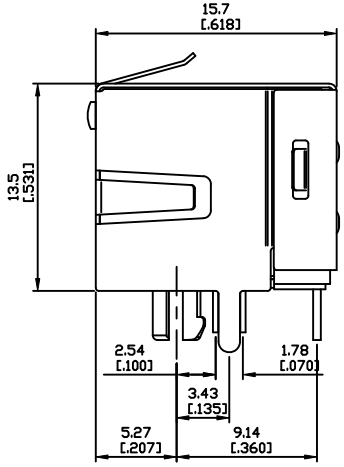

Electrical Characteristics :
Insulation Resistance : 500MΩ Min.
Contact Resistance : 50mΩ Max.
Withstand Voltage : 1000 VAC 1 minute.
Current Rating : 1.5A

Material:
Housing: Thermoplastic UL 94V-0
Contact : Selective Gold Plating
Terminal: 0.35mm Thickness Phosphor Bronze
Plated With Gold And Tin In Solder Area.
Shielded: Brass ,Nickel Plating
CUL File No : E215573

PART NO : 8 1 8 8 D S - B∗1∗- 0

- Positions
- Contacts
- Panel Ground
  S : 3 Side With Panel Ground
- Housing Color
  B : Black
- Led Options
- Ports
- Gold Plated
  0 : Gold Flash
  1 : 6u"
  2 : 15u"
  3 : 30u"
  4 : 50u"

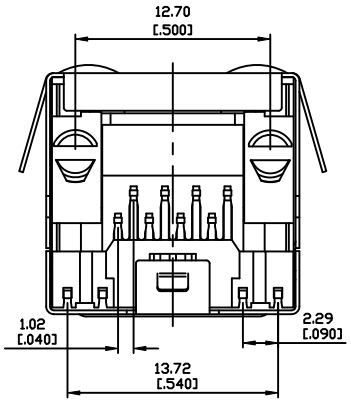

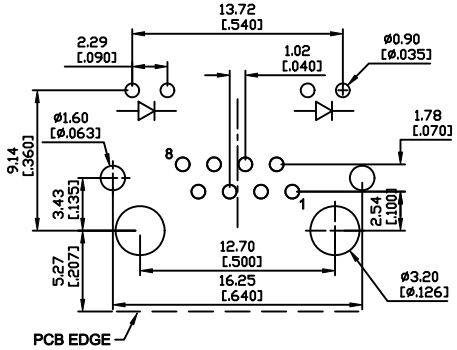

SUGGESTED PCB LAYOUT
TOP VIEW

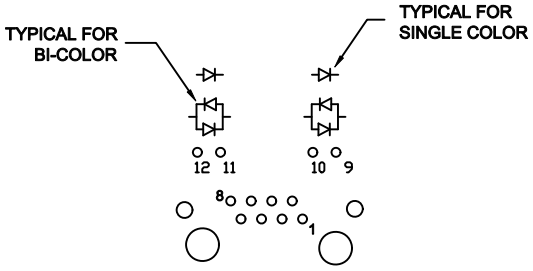

LED SCHEMATIC

LED Color Options Table

LED Color Options		LED DASH OPTION
LED 2 (Left)	LED 1 (Right)	
No LED	No LED	0
Yellow	Green	1
No LED	Green	2
Yellow	No LED	3
Green	Yellow	4
Green	Green	5
Yellow	Yellow	6
Orange/Green	Orange/Green	7
Yellow/Green	Yellow/Green	8
Orange/Green	Yellow	9
No LED	Green/Yellow	Z
Green	Orange	A
Orange	Green	B
Green	Red	C
Red	Green	D

Ⓐ

博歲電子股份有限公司
POWERWAY ELECTRONICS CO.,LTD.

ZONE	REV.	DESCRIPTION	DATE	APPD.
Ⓐ	A.1	Withstand Voltage 500修改為1000VAC	2008-08-01	Nick
Ⓑ				
Ⓒ				
Ⓓ				
Ⓔ				

FILE NO : 81 (SERIES)

TOLERANCE (公差) :
0.000 mm ± 0.075mm
0.00 mm ± 0.15mm
0.0 mm ± 0.25mm

TITLE 圖 名	SHIELDED RJ45 WITH LED PCB JACK			UNIT 單位	mm inch
PART NO. 料 號	8188DS-B∗1∗-0			SCALE 比 例	1 : 1
REV. 版本	A.1	DATE 日 期	2007-03-22		
CHECKED BY 審 核	Michael	DRAWN BY 製 圖	Valiant		